Chapter 7 – Cellular Networks, GSM and UMTS

Lecture Mobile Communication

Oliver Waldhorst

Outline

Wi-Fi, Bluetooth

GSM, UMTS, LTE, 5G

Mobility Management

Medium Access

Wireless Transmission

Introduction to Cellular Networks

Motivation

- Areas of application for cellular networks
  - Initially: Mobile telephone accessibility (regional / global)
  - Then: Mobile access to Internet services
  - Today: Seamless Internet connectivity for people and things

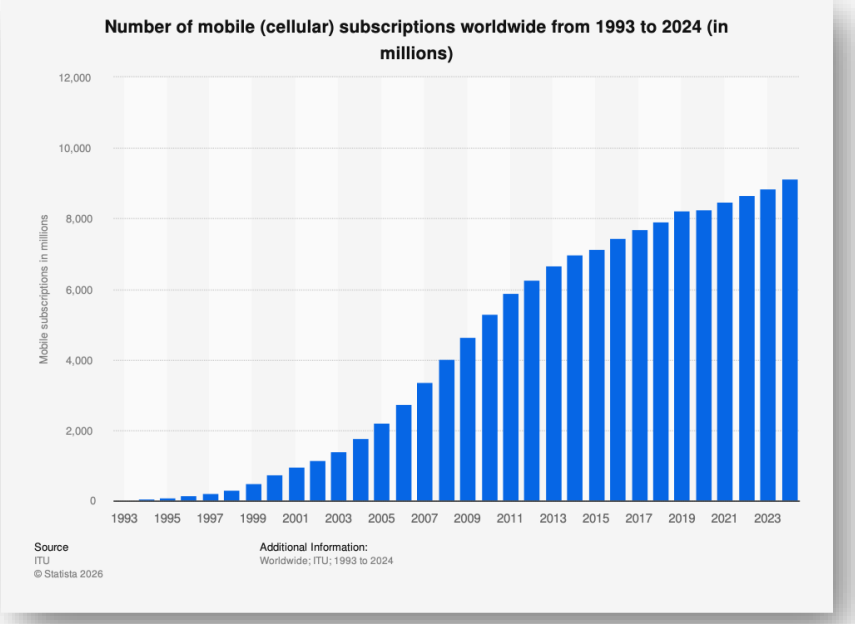

Historical Development

- 2nd Generation (2G): E.g., Global System for Mobile Communications (GSM)
  - Start of development in 1982, commercial launch in 1992
  - Basis of large parts of the currently operated mobile networks
  - Shutdown in Germany planned from around 2028
- 3rd Generation (3G): E.g., Universal Mobile Telecommunications System (UMTS)
  - Commercial launch 2003
  - Ongoing development in releases, defined by the 3rd Generation Partnership Project (3GPP)
  - Already shut down in Germany (Telekom and Vodafone 30.06.2021, O2 30.12.2021)
- 4th Generation (4G): Long Term Evolution (LTE)
  - Commercial launch 2010
- 5th Generation (5G)
  - Commercial launch 2019
- 6th Generation (6G)
  - Currently in research and standardization
  - Commercial launch expected 2030

Comparison of Cellular Network Generations

[7.1]

Generation	Mobile communications technology	Data Rate Maximum
1G	AMPS	-
2G	GSM	9,6 kbit/s
2.5G	HSCSD	57,6 kbit/s
	GPRS	115 kbit/s
2.75G	EDGE	236 kbit/s
3G	UMTS	384 kbit/s
3.5G	HSPA	14,4 Mbit/s
	HSPA+	42,2 Mbit/s
3.9G	LTE (up to Cat 4)	150 Mbit/s
4G	LTE Advanced (LTE-A ab Cat 6)	300 to 600 Mbps
4.5G	LTE Advanced Pro (LTE-AP ab Cat 11)	1 Gbit/s
5G	5G	10 Gbit/s

Overview 3GPP Releases (1)

Release	Date	Details
Phase 1	1992	**GSM**-Basis
Phase 2	1995	GSM functions including EFR codec
Release 96	1997	GSM updates, 14.4 kbps user data
Release 97	1998	Additional GSM functions, GPRS
Release 98	1999	Additional GSM functions, GPRS for PCS 1900, AMR, EDGE
Release 99	2000	3G **UMTS** with WCDMA radio access
Release 4	2001	UMTS All-IP core network
Release 5	2002	IMS and HSDPA
Release 6	2004	HSUPA, MBMS, IMS improvements, push-to-talk via cellular, operation with WLAN
Release 7	2007	Improvements in QoS & Latency, VoIP, HSPA+, NFC Integration, EDGE Evolution
Release 8	2008	Introduction of **LTE**, SAE, OFDMA, MIMO, Dual Cell HSDPA
Release 9	2009	WiMAX / LTE / UMTS interoperability, Dual Cell HSDPA with MIMO, Dual Cell HSUPA, LTE HeNB
Release 10	2011	LTE-Advanced, backward compatibility with Release 8 (LTE), Multi-Cell HSDPA
Release 11	2012	Heterogeneous Networks (HetNet), Coordinated Multipoint (CoMP), In-Device Coexistence (IDC), Advanced IP Networking of Services
Release 12	2015	Improved operation of small cells, carrier bundling (2 uplink carriers, 3 downlink carriers, FDD/TDD carrier bundling), MIMO (3D channel modeling, elevation beamforming, massive MIMO), MTC – UE Category 0 introduced, D2D communication, eMBMS improvements
Release 13	2016	LTE-U / LTE-LAA, LTE-M, Elevation Beamforming / Full Dimension MIMO, Indoor Positioning, LTE-M Category 1.4 MHz & Category 200 kHz introduced

[7.3]

Overview 3GPP Releases (1)

Release	Date	Details
Release 14	2017	Steps on the way to **5G**
Release 15	2018	5G Phase 1 Specification: NSA/SA Architecture, Massive MIMO, Beamforming
Release 16	2020	5G Phase 2 Specification: URLLC, V2X, IoT, IAB
Release 17	2022	RedCap, NTN, Positioning, Sidelink
Release 18	2024	5G-Advanced: KI/ML, XR/AR/VR, IoT, UAVs
Release 19	2025	Other 5G-Advanced Features, XR, LP-WUS, AI/ML
Release 20	2027 (ongoing)	5G-Advanced + Start of **6G** Trials

[7.3]

Frequency auction – example UMTS

STAND DER LIZENZVERGABE

Versteigerung UMTS/IMT-2000-Lizenzen

Runde 173 Datum 17.08.00 Uhrzeit 15:51:26

Höchstgebote für Frequenzblöcke (mind. 2 Blöcke erforderlich für Lizenz)

Bieter	Anzahl der Frequenzblöcke 1	2	3	Lizenzgebot (TDM)	(€ in Tsd)
E-Plus Hutchison	2 x 5 MHz	2 x 5 MHz		16.418.200	8.394.492
Group 3G	2 x 5 MHz	2 x 5 MHz		16.446.000	8.408.706
Mannesmann Mobilfunk	2 x 5 MHz	2 x 5 MHz		16.473.800	8.422.920
MobilCom Multimedia	2 x 5 MHz	2 x 5 MHz		16.370.000	8.369.848
T-Mobil	2 x 5 MHz	2 x 5 MHz		16.582.200	8.478.344
VIAG Interkom	2 x 5 MHz	2 x 5 MHz		16.517.000	8.445.008
debitel Multimedia	ausgeschieden				
Lizenzsumme				98.807.200	50.519.319

RUNDENERGEBNIS

Versteigerung UMTS/IMT-2000-Frequenzen

Runde: 9

Lfd. Nr.	Umfang	Höchstbieter	Höchstgebot (TDM)	Höchstgebot* (€ in Tsd)
13	1 x 5 MHz konkret	E-Plus Hutchison	73.600	37.631
14	1 x 5 MHz	MobilCom Multimedia	121.000	61.866
15	1 x 5 MHz	T-Mobil	122.700	62.736
16	1 x 5 MHz	Mannesmann Mobilfunk	121.000	61.866
17	1 x 5 MHz	Group 3G	122.700	62.736
		Summe Höchstgebote	561.000	286.835

* Eurowerte gerundet

VIAG Interkom ausgeschieden

- UTRA-FDD
  - Uplink 1920-1980 MHz
  - Downlink 2110-2170 MHz
  - Duplex distance 190 MHz
  - 12 channels of 5 MHz each
- UTRA-TDD
  - 1900-1920 MHz,
  - 2010-2025 MHz;
  - 5 MHz channels each
- Coverage in the population:
  - 25% until 12/2003
  - 50% until 12/2005
- Total: 99.3682 billion DM (approx. 50 billion €)

Network coverage: Example Vodafone

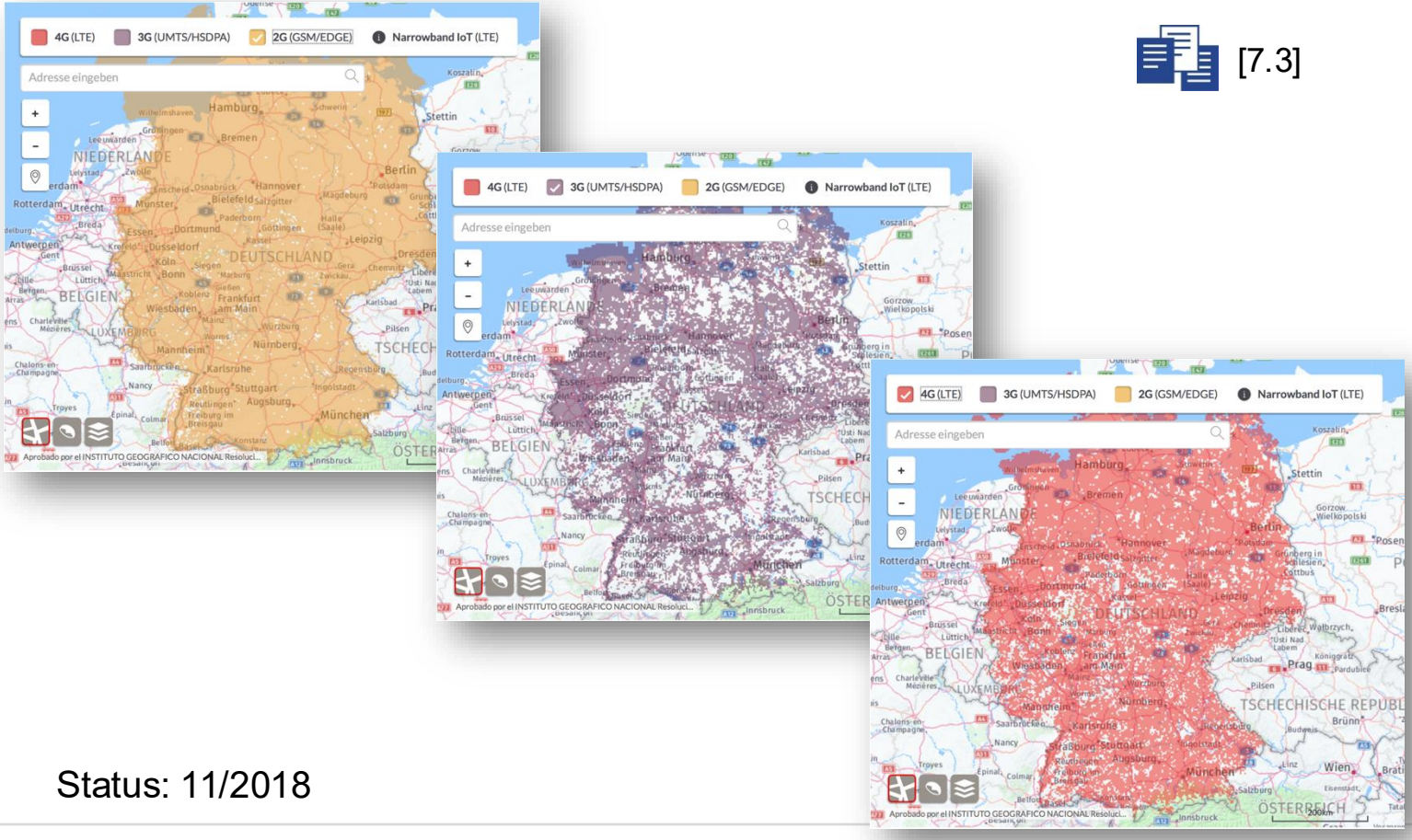

[7.3]

Status: 11/2018

Fundamentals of Cellular Networks

Cellular Networks - Motivation

- Goal: Every mobile device should be able to connect to every other, no matter where devices are located

- Consequences
  - Direct connections not possible, limited transmission range
  - In addition, connection to fixed telephone network / Internet necessary
  - Therefore: Support of mobile stations through fixed network infrastructure

- Cellular network
  - Mobile station communicates with base stations
  - Base stations communicate with each other or with fixed telephone network / Internet
  - Base stations are connected via fixed infrastructure
    - Takes on other tasks, e.g. mobility management

- Structure / architecture required for wireless and wired part

Principle of Cellular Networks

- Division of the service area into cells

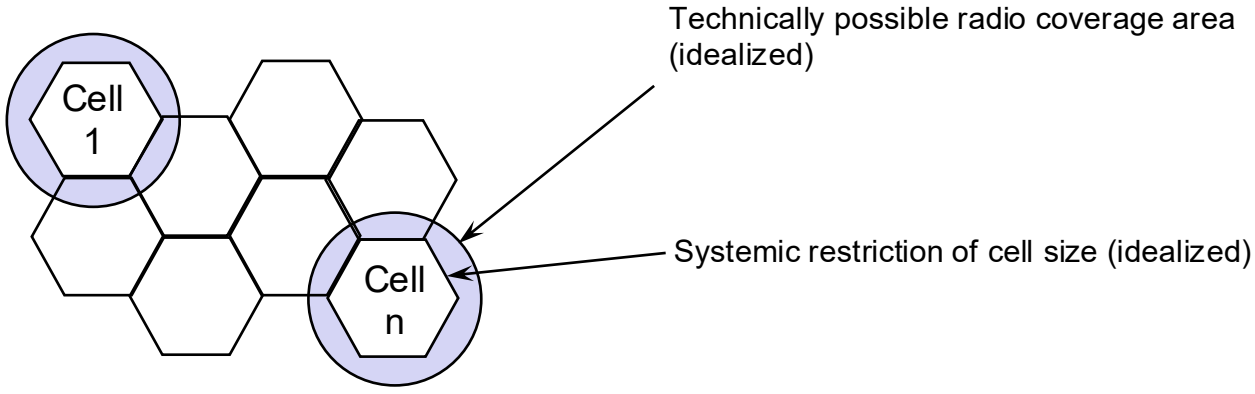

- Use of multiple physical channels (radio frequencies, time slots, codes, subcarriers, ...)
  - Different channels in adjacent cells – space division multiplexing
- Irregular cell sizes and shapes
  - Size depends on traffic volume and transmission range (city center vs. Black Forest)from 500 m (urban) to 35 km (rural)
  - Hexagonal cell form is idealized
  - Cells overlap irregularly
- Mobile subscribers may move between cells
  - Transfer of the connection to the neighboring cell, cf. handover

Types of Base Stations

- Base station can work with omnidirectional or sectorized antennas

Omnidirectional
Base Station

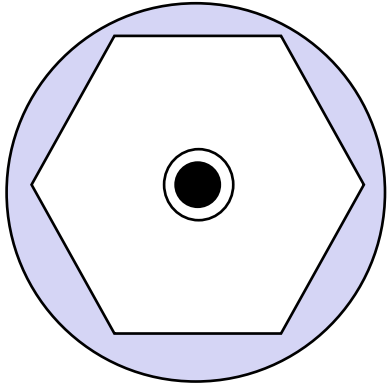

Sectorized
base station

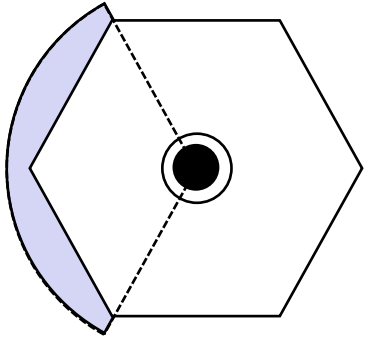

Cell Planning

- Channel reuse requires sufficient cell spacing
- Example:

3 channels

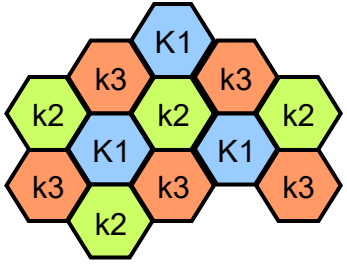

7 channels

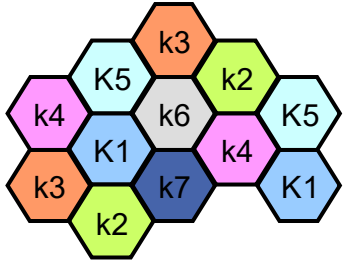

- Fixed channel assignment
  - a certain number of channels assigned to a certain cell
  - Problem: Change in load on the cells
- Dynamic channel assignment
  - Channels of a cell are selected according to already assigned channels of the neighboring cells
  - more capacity in areas with higher demand
  - Assignment based on interference measurements also possible

GSM Base Stations by O2 in Karlsruhe

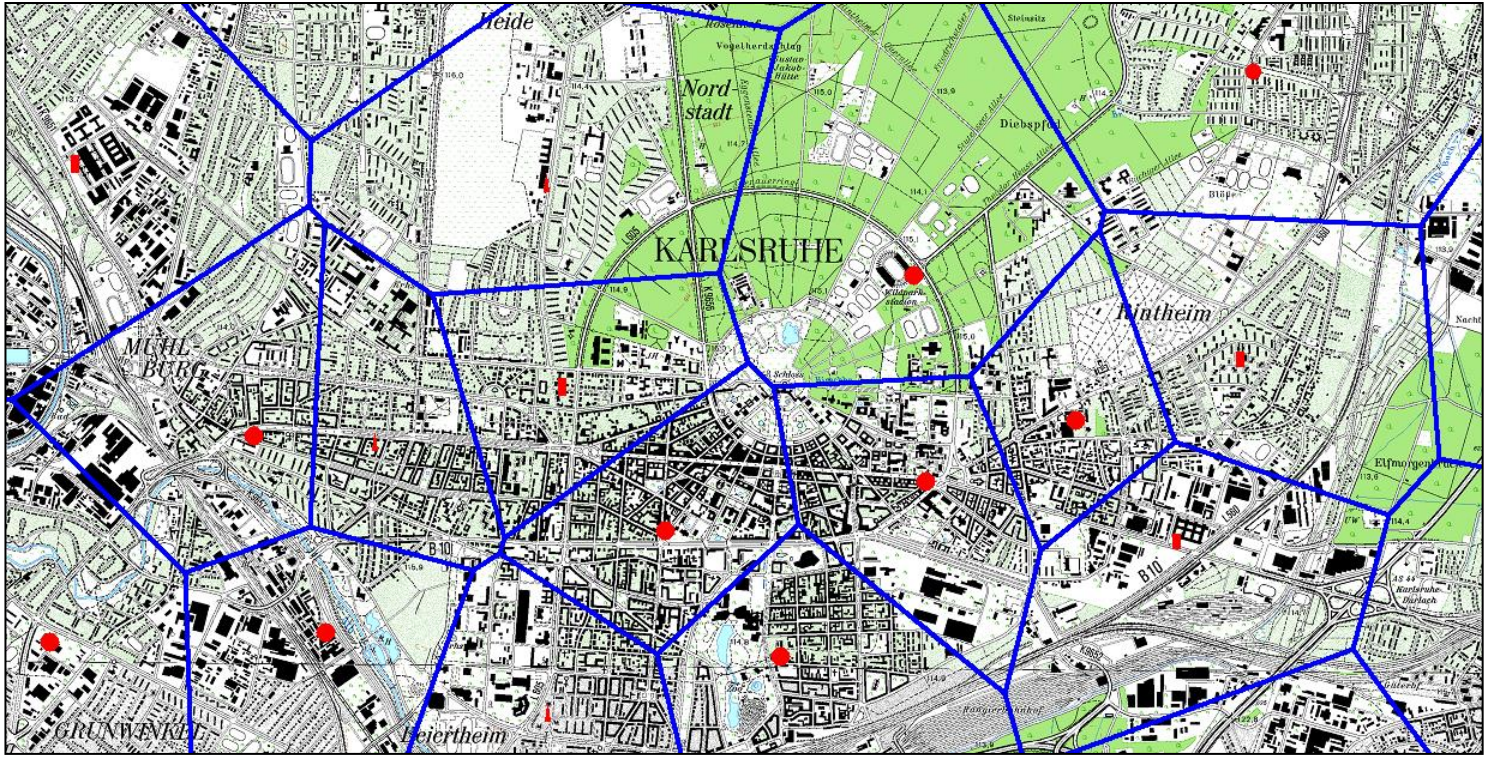

Source: Unknown

Operators and SIM Card

- Mobile networks are built, operated and maintained by network operators
  - In Germany currently T-Mobile, Vodafone, Telefonica (O2)

- Connection to the mobile network can also be made via service providers
  - Buys phone numbers and minutes / data volume form network operator
  - Issues invoices
  - Variety of tariffs possible

- Mobile device requires Subscriber Identity Module (SIM card) to access the network
  - USIM for UMTS/LTE
  - ISIM for IMS services (VoLTE, VoWiFi)
  - Issued by network operator / service provider

SIM-Identifier (1)

Generation	SIM Type	Permanent Identify	Temporary identifiers	Telephony Identifier	Special features
GSM (2G)	SIM	IMSI	TMSI	MSISDN, MSRN	Classic Language Services
UMTS (3G)	USIM	IMSI	TMSI	MSISDN, MSRN	Packet Data + Circuit-Switched Voice Services
LTE (4G)	USIM/eSIM	IMSI	GUTI	MSISDN (VoLTE via SIP)	IP-based voice services
5G	USIM/eSIM/ISIM	SUPI (≈ IMSI)	GUTI, HOLY	SIP-URI (MSISDN optional)	Strong IMSI encryption, pure IP communication

SIM-Identifier (2)

Identifier	Description	Type	Usage
IMSI	International Mobile Subscriber Identity – unique identifier of the subscriber	Permanent	Authentication in the core network
MSISDN	Mobile Station ISDN Number – the telephone number of the subscriber	Permanent	Telephony, SMS
TMSI	Temporary Mobile Subscriber Identity – replaces IMSI in the radio range	Temporary	Data protection, signalling in GSM/UMTS
GUTI	Globally Unique Temporary Identifier – LTE/5G equivalent to TMSI	Temporary	Data protection, signalling in LTE/5G
MSRN	Mobile Station Roaming Number – for call forwarding in GSM/UMTS	Temporary	Circuit-Switched Voice (no longer in LTE/5G)
SUPI	Subscriber Permanent Identifier – 5G equivalent of IMSI	Permanent	Authentication in the 5G core network
SUCI	Subscriber Concealed Identifier – encrypted SUPI for radio transmission	Temporary	Data protection in 5G
SIP URI	Session Initiation Protocol URI – IP-based address for VoLTE/IMS services	Permanent	VoIP, VoLTE, multimedia services

More Data on the SIM (simplified)

```
MF (Master File)
├── DF GSM (Dedicated File für GSM)
│     ├── EF IMSI (International Mobile Subscriber Identity)
│     ├── EF Kc (Ciphering Key)
│     ├── EF LOCI (Location Information)
│     ├── EF PLMNsel (Preferred PLMN)
│     ├── EF HPLMN (Home PLMN)
│     ├── EF FPLMN (Forbidden PLMN)
│     └── EF ACC (Access Control Class)
├── DF TELECOM (Dedicated File for Telephony)
│     ├── EF ADN (Abbreviated Dialing Numbers)
│     ├── EF SMS (Short Messages)
│     ├── EF MSISDN (Subscriber Number)
│     └── EF LND (Last Number Dialed)
└── DF USIM (for UMTS/LTE)
└── EF USIM-IMSI
      ├── EF Keys
      ├── EF GUTI
      └── EF Service Table
```

Mobile Network Architecture

- Mobil station
  - User terminals, mobile phones
- Radio access network
  - Base Stations & Connections
- Core network
  - Connection to other telephone networks, Internet, ...

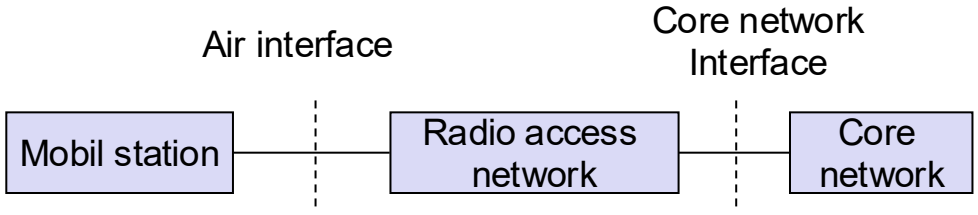

GSM / UMTS System Architecture Overview and Evolution

UMTS Architecture

- Mobile Stations (User Equipment - UE)
  - UMTS-enabled devices
- UMTS Terrestrial Radio Access Network (UTRAN)
  - Encapsulation of radio-specific processes
  - Mobility management at the cell level
- Core Network (CN)
  - Handover to other mobile networks
  - Mobility management if there is no dedicated connection between the mobile station and UTRAN
  - Connection of different networks (GSM, ISDN, Internet ...)

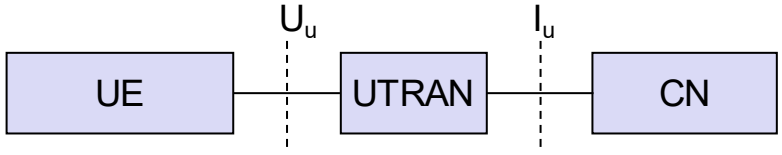

Phases of UMTS Introduction

- Starting point: Existing GSM infrastructure

- Release 99
  - Continued use of GSM infrastructure in the core network
    - Incl. GPRS and EDGE (see below)
    - Two "separate" infrastructures for circuit switching and packet switching
  - UTRAN as a new radio access network

- Release 6
  - "All-IP"
    - A packet-switched core network
    - IMS: IP-based Multimedia Subsystem
  - GERAN (GSM/EDGE RAN)

- Release initially identified by year (99), then by sequential number (4, 5, 6, ...)

[7.4, 7.5]

Overview GSM Infrastructure

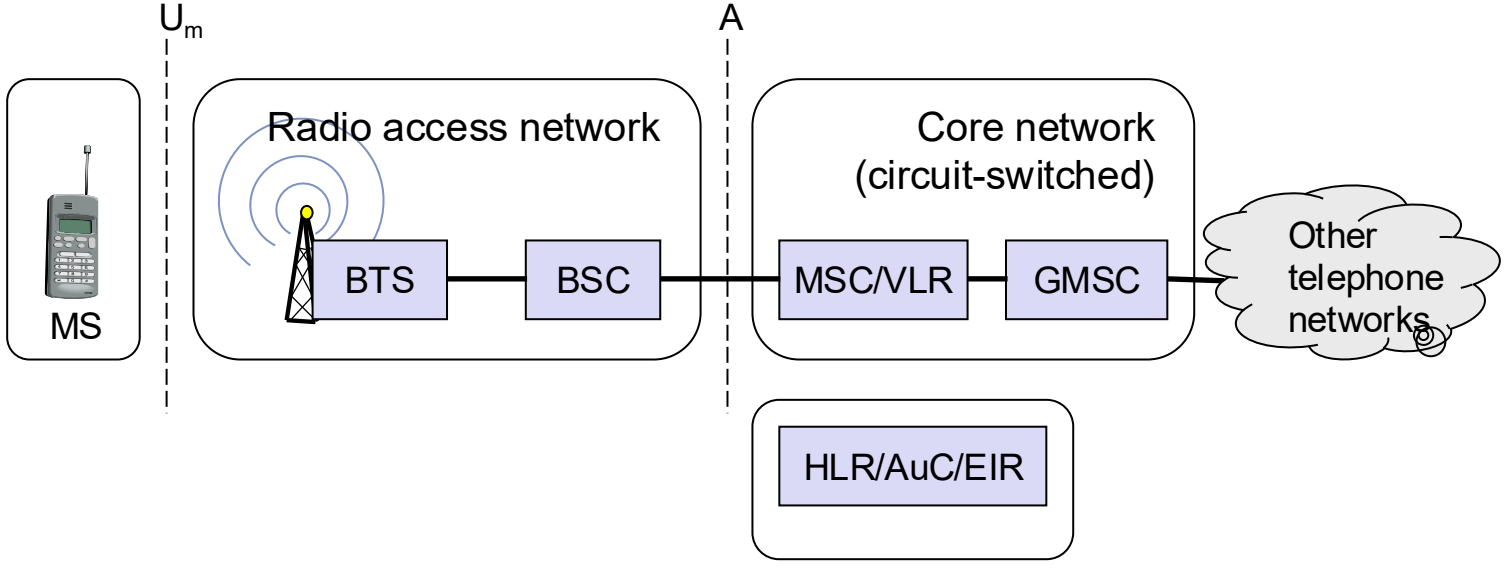

GSM Infrastructure Components (1)

- Mobile Station (MS)

- Radio access network
  - Base Transceiver Station (BTS)
    - Transmitting/receiving equipment including antennas
    - A base station can supply one or, if directional antennas are installed, several radio cells.
  - Base Station Controller (BSC)
    - Central control device for managing the air interface

- Core network (circuit-switched)
  - Mobile Switching Center (MSC)
    - Multiple BSCs can be connected to an MSC
    - Connection to other telephone networks through Gateway Mobile Switching Center (GMSC)
  - Visitor Location Register (VLR)
    - Management of current participants in the MSC area of responsibility
    - One VLR per MSC!

GSM Infrastructure Components (2)

- Home Location Register (HLR)
  - Database with all information relevant to a mobile subscriber
  - Each mobile subscriber is registered in exactly one home registry
  - One HLR per network operator!

- Authentication Center (AuC)
  - Contains all safety-related information

- Equipment Identity Register (EIR)
  - Central device database with subscriber and identification number for mobile station

General Packet Radio Service (GPRS) (1)

- New part of the core network: GPRS Packet Core
  - Packet switching, connection to the Internet
  - New media access on the air interface

- Components
  - Serving GPRS Support Node (SGSN)
    - Functional support of mobile stations
    - Location, billing, security
    - Each SGSN is associated with an MSC
  - Gateway GPRS Support Node (GGSN)
    - Interface to external networks
    - Evaluation of the addresses in the data units and assignment to IMSI

General Packet Radio Service (GPRS) (2)

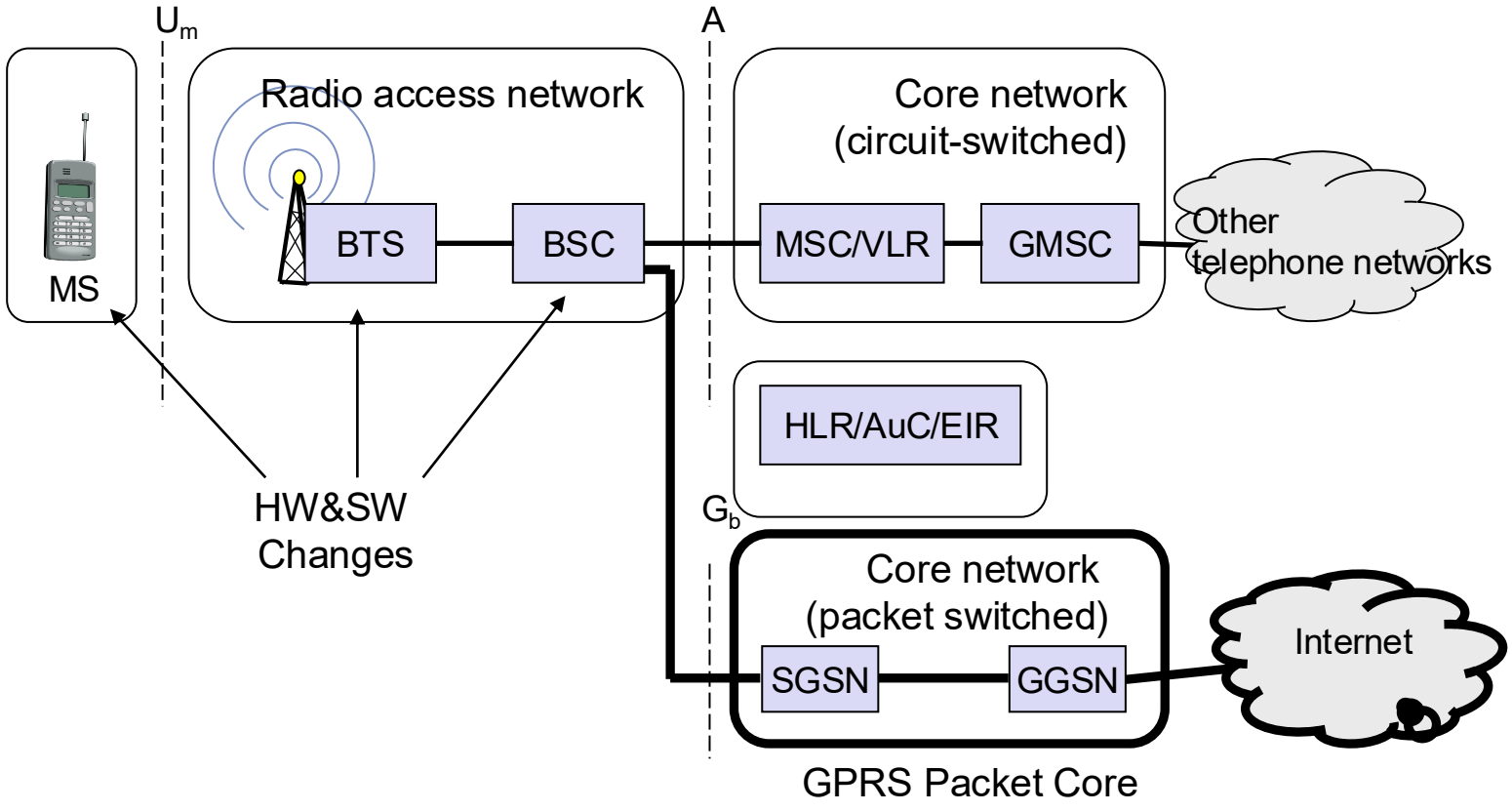

Enhanced Data Rates for GSM Evolution (EDGE)

- Objective
  - Extending GSM to provide higher data rates
    - Faster availability than 3rd generation systems (UMTS)
    - Investment protection
      - Use of established infrastructure

- Solution: EDGE
  - Suitable for both circuit-switched and packet-switched services
  - Modification of the modulation method
    - Approx. 69.2 kbps per physical channel
    - Maximum achievable net data rate
      - With 8 physical channels: 384 kbit/s

Integration of EDGE with GSM

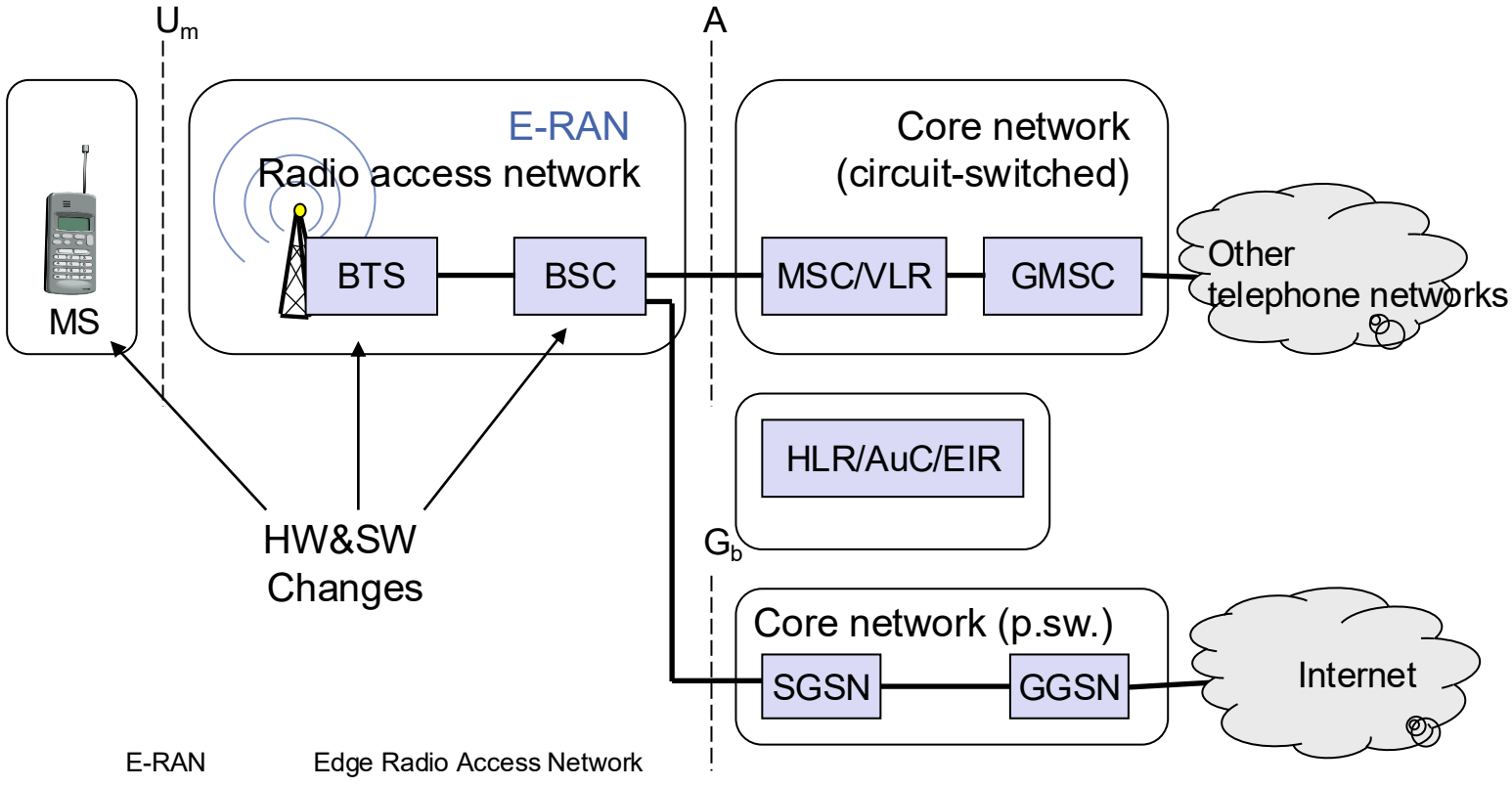

UMTS Release 99 (1)

- New access network: UMTS Terrestrial Radio Network (UTRAN)
  - Components:
    - Base Station (NodeB)
      - Equivalent to GSM Base Station (BTS)
      - Physical communication with the mobile station
      - Can include one or more cells
    - Radio Network Controller (RNC)
      - Equivalent to GSM Fixed Station Control (BSC)
      - Works is very different from BSC
        - Mobility management, macrodiversity...
      - Responsible for handover decisions
  - Connection to circuit- and packet-switched domain

UMTS Release 99 (2)

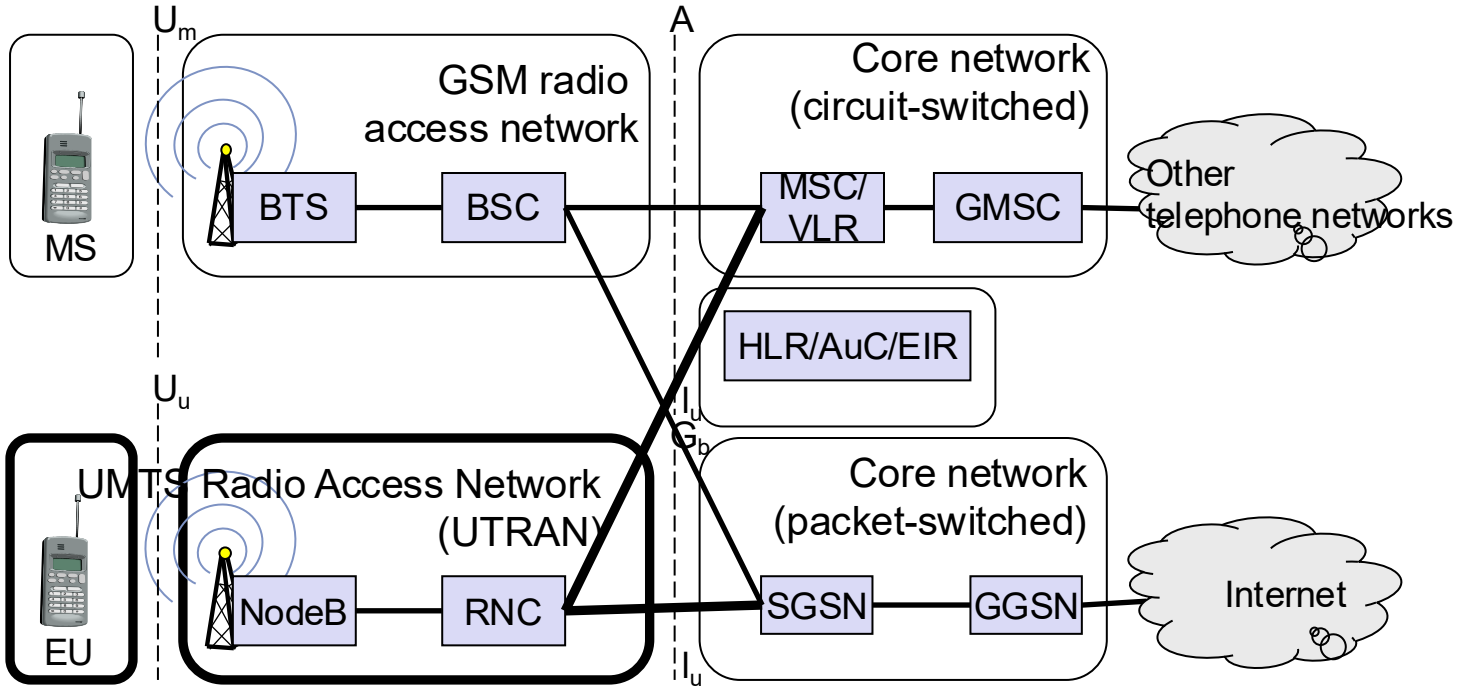

UMTS Release 6: All-IP

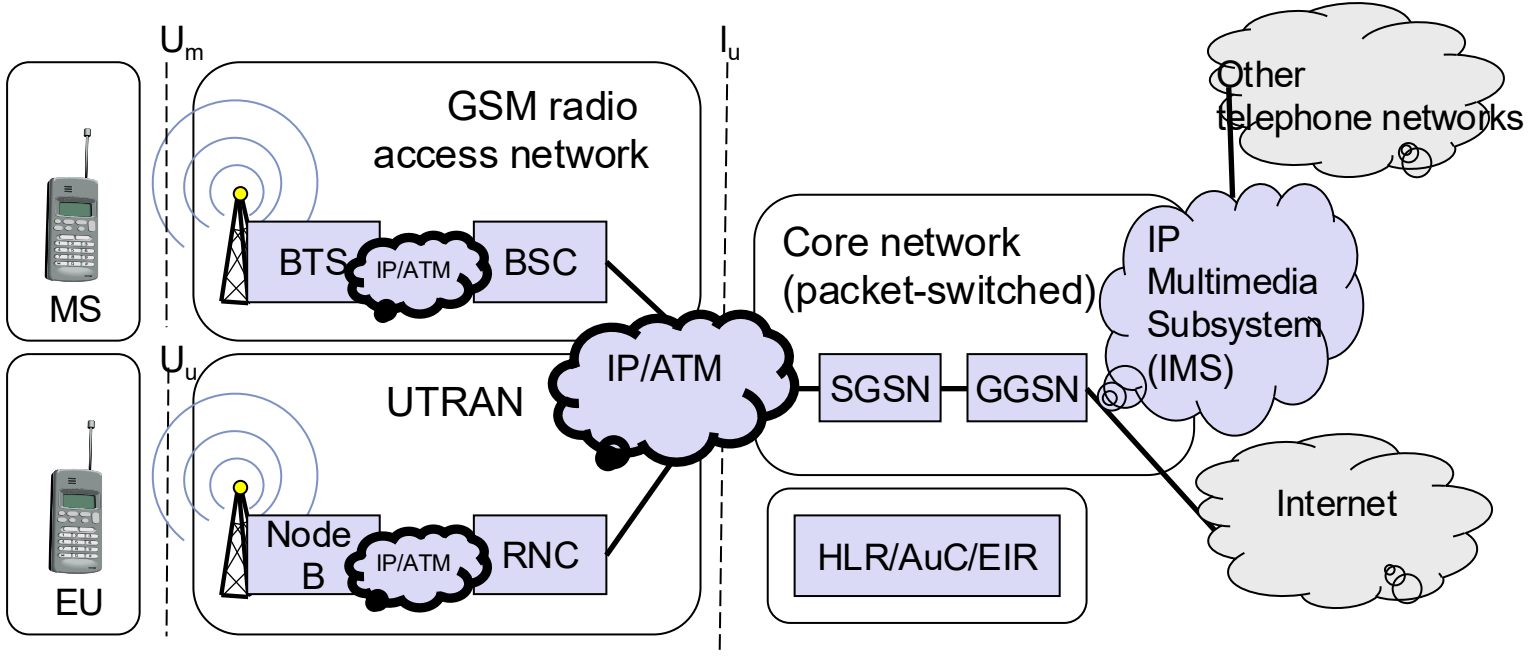

Global System for Mobile Communications (GSM)

Wireless transmission in GSM

The GSM Air Interface U_m

- Between mobile station and "rest" GSM network
  - Physical communication
    - Between mobile station and BTS
  - Logical communication
    - Between mobile station and BSC
    - Between mobile station and MSC

- Multiplexing techniques used
  - Space division multiplexing (SDM)
    - Cell structure, see above
  - Frequency division multiplexing (FDM)
    - Assignment of frequencies to base stations / radio cells
  - Time division multiplexing (TDM)
    - Use of time slots on frequencies

Structure of Frequency Division Multiplexing

Frequency Duplex

- Transmitting and receiving on different frequency bands
  - Each 25 MHz width
- Mobile station to base station (uplink)
  - 890 MHz – 915 MHz
- Base station to mobile station (downlink)
  - 935 MHz – 960 MHz

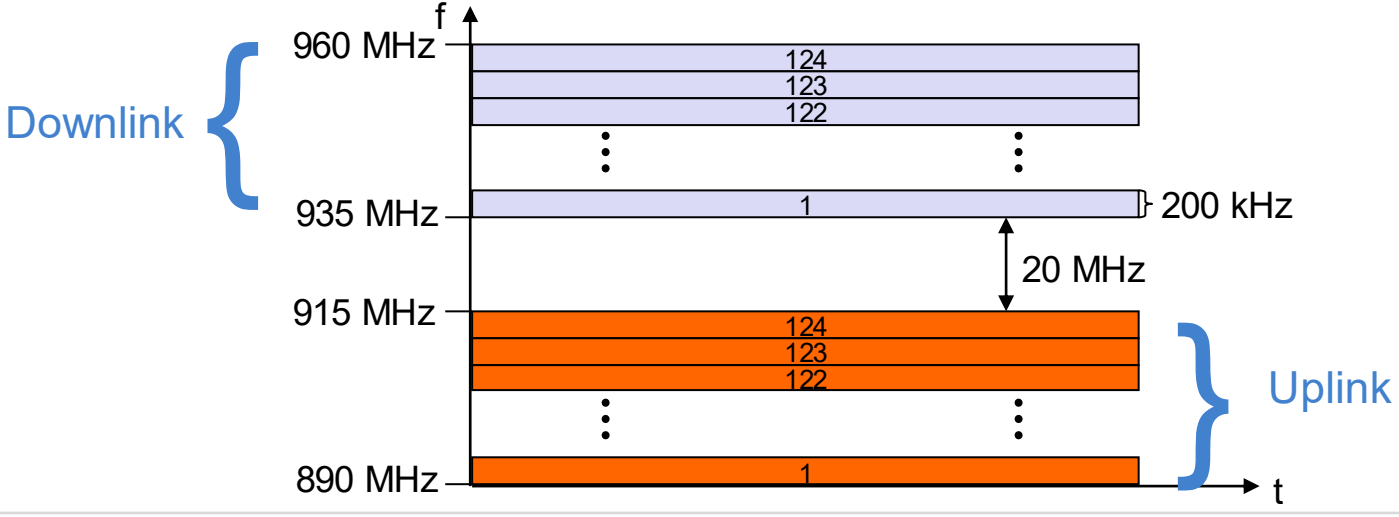

Structure of time division multiplexing

- 8 physical channels implemented on each carrier frequency by time division multiplexing
  - Time slot duration: 0.577 ms
    - Tail: set to zero
    - S: Data/Tax Information
    - Training: fixed sequence
  - 8 time slots form TDMA frame (4,615 ms)
- On uplink and downlink
  - Stations do not transmit and receive at the same time
  - Offset of channels by 3 time slots between uplink and downlink

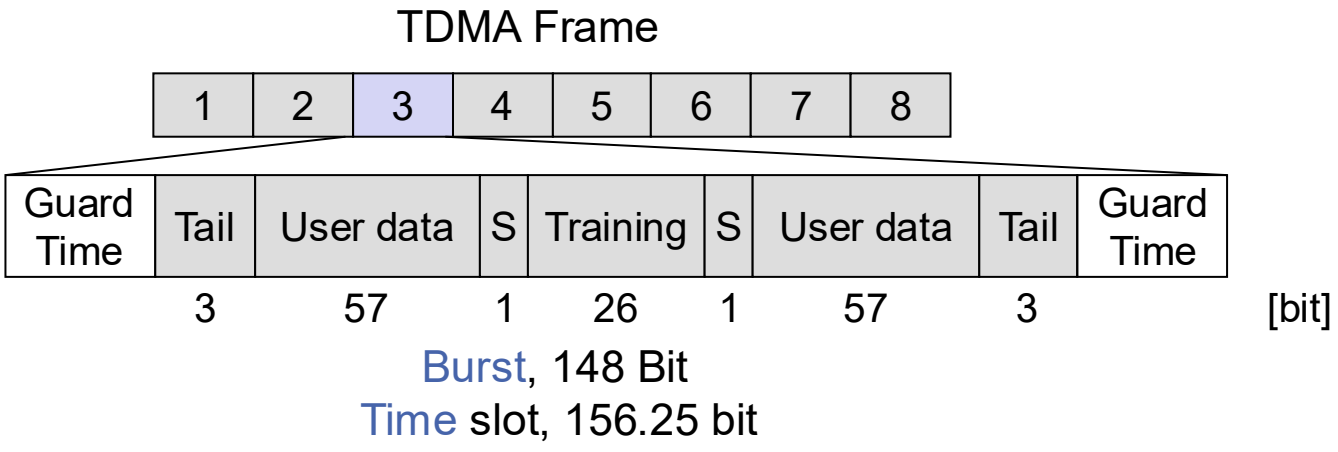

Global System for Mobile Communications (GSM)

Media access in GSM

Physical vs. Logical Channels

- Problem: Only eight physical channels per frequency
  - In Zelle, however, many (>> 8) different types of information flows have to be transmitted
    - Voice & data of multiple users, control information (paging, call setup, ...)

- Solution: Logical channels
  - Group similar or related information flows
  - Are mapped to physical channels according to a fixed pattern
    - E.g. Logical channel for frequency corrections (FCCH, see below) in every 10th frame in time slot 1

- Classes of Logical Channels
  - Traffic channels and control channels
  - Dedicated channels and common channels

Overview of Logical Channels

- **Traffic channels**
  - TCH/F Full Rate Traffic Channel
  - TCH/H Half Rate Traffic Channel

    } *Voice transmission*

  - TCH/F4.8, TCH/F9.6, TCH/F14.4

    } *Data transfer*

- **Control channels**
  - BCCH Broadcast Control Channel
    - FCCH Frequency Correction Control Channel
    - SCH Synchronization Channel

    } *Information from base station to all mobile stations*

  - CCCH Common Control Channel
    - PCH Paging Channel
    - RACH Random Access Channel
    - AGCH Access Grant Channel

    } *Establishing a connection network -> Mobile station*

  - DCCH Dedicated Control Channel
    - SDCCH Stand-alone DCCH
    - FACCH Fast Associated DCCH (only together with TCH)
    - SACCH Slow Associated DCCH (only together with TCH / SDCCH)

    } *Signaling information for connection control*

Mapping Logical to Physical channels

- Control channels occupy time slots TS-0, TS-1 on the first frequency of a cell
  - Observation: Many more logical channels than reserved time slots
  - Fixed pattern defined over 51 TDMA frames (control mulitframes)
- Other time slots (TS-2 to TS-7) are occupied by up to six traffic channels (each including SACCH)
  - Fixed pattern defined over 26 TDMA frames (traffic multiframes)
  - SACCH in every 13th frame
  - Frame 26 unused, e.g. for measurements on other frequencies
- Other frequencies of a cell used entirely for traffic channels

- Example downlink:

FN	TS-0	TS-1
0	FCCH	SDCCH/0
1	SCH	SDCCH/0
2	BCCH	SDCCH/0
3	BCCH	SDCCH/0
4	BCCH	SDCCH/1
5	BCCH	SDCCH/1
6	AGCH/PCH	SDCCH/1
7	AGCH/PCH	SDCCH/1
8	AGCH/PCH	SDCCH/2
9	AGCH/PCH	SDCCH/2
10	FCCH	SDCCH/2
11	SCH	SDCCH/2
12	AGCH/PCH	SDCCH/3
13	AGCH/PCH	SDCCH/3
14	AGCH/PCH	SDCCH/3
15	AGCH/PCH	SDCCH/3
16	AGCH/PCH	SDCCH/4
17	AGCH/PCH	SDCCH/4
18	AGCH/PCH	SDCCH/4
19	AGCH/PCH	SDCCH/4
20	FCCH	SDCCH/5
21	SCH	SDCCH/5
22	SDCCH/0	SDCCH/5
23	SDCCH/0	SDCCH/5
24	SDCCH/0	SDCCH/6
25	SDCCH/0	SDCCH/6
26	SDCCH/1	SDCCH/6
27	SDCCH/1	SDCCH/6
28	SDCCH/1	SDCCH/7
29	SDCCH/1	SDCCH/7
30	FCCH	SDCCH/7
31	SCH	SDCCH/7
32	SDCCH/2	SACCH/0
33	SDCCH/2	SACCH/0
34	SDCCH/2	SACCH/0
35	SDCCH/2	SACCH/0
36	SDCCH/3	SACCH/1
37	SDCCH/3	SACCH/1
38	SDCCH/3	SACCH/1
39	SDCCH/3	SACCH/1
40	FCCH	SACCH/2
41	SCH	SACCH/2
42	SACCH/0	SACCH/2
43	SACCH/0	SACCH/2
44	SACCH/0	SACCH/3
45	SACCH/0	SACCH/3
46	SACCH/1	SACCH/3
47	SACCH/1	SACCH/3
48	SACCH/1	free
49	SACCH/1	free
50	free	free

FN	TS-2	...	TS-7
0	TCH		TCH
1	TCH		TCH
2	TCH		TCH
3	TCH		TCH
4	TCH		TCH
5	TCH		TCH
6	TCH		TCH
7	TCH		TCH
8	TCH		TCH
9	TCH		TCH
10	TCH		TCH
11	TCH		TCH
12	SACCH		SACCH
13	TCH		TCH
14	TCH		TCH
15	TCH		TCH
16	TCH		TCH
17	TCH		TCH
18	TCH		TCH
19	TCH		TCH
20	TCH		TCH
21	TCH		TCH
22	TCH		TCH
23	TCH		TCH
24	TCH		TCH
25	free		free
0	TCH		TCH
1	TCH		TCH
2	TCH		TCH
3	TCH		TCH
4	TCH		TCH
5	TCH		TCH
6	TCH		TCH
7	TCH		TCH
8	TCH		TCH
9	TCH		TCH
10	TCH		TCH
11	TCH		TCH
12	SACCH		SACCH
13	TCH		TCH
14	TCH		TCH
15	TCH		TCH
16	TCH		TCH
17	TCH		TCH
18	TCH		TCH
19	TCH		TCH
20	TCH		TCH
21	TCH		TCH
22	TCH		TCH
23	TCH		TCH
24	TCH		TCH
25	free		free

Source of illustration: M. Sauter, Basic Course Mobile Communication Systems, 7th edition, Springer, 2018

Super- and Hyperframes

- Frameworks are further grouped hierarchically
  - Superframe
    - 1326 (= 51 * 26) consecutive TDMA frames
    - Traffic Superframe
      - 51 traffic multiple frames with 26 TDMA frames each
    - Control Superframe
      - 26 control multiple frames with 51 TDMA frames each
  - Hyperframe
    - 2048 Super Frame
      - 2,715,648 TDMA frames; for almost 3.5 hours
    - Used to synchronize payload encryption

Hierarchy of Frame Structures

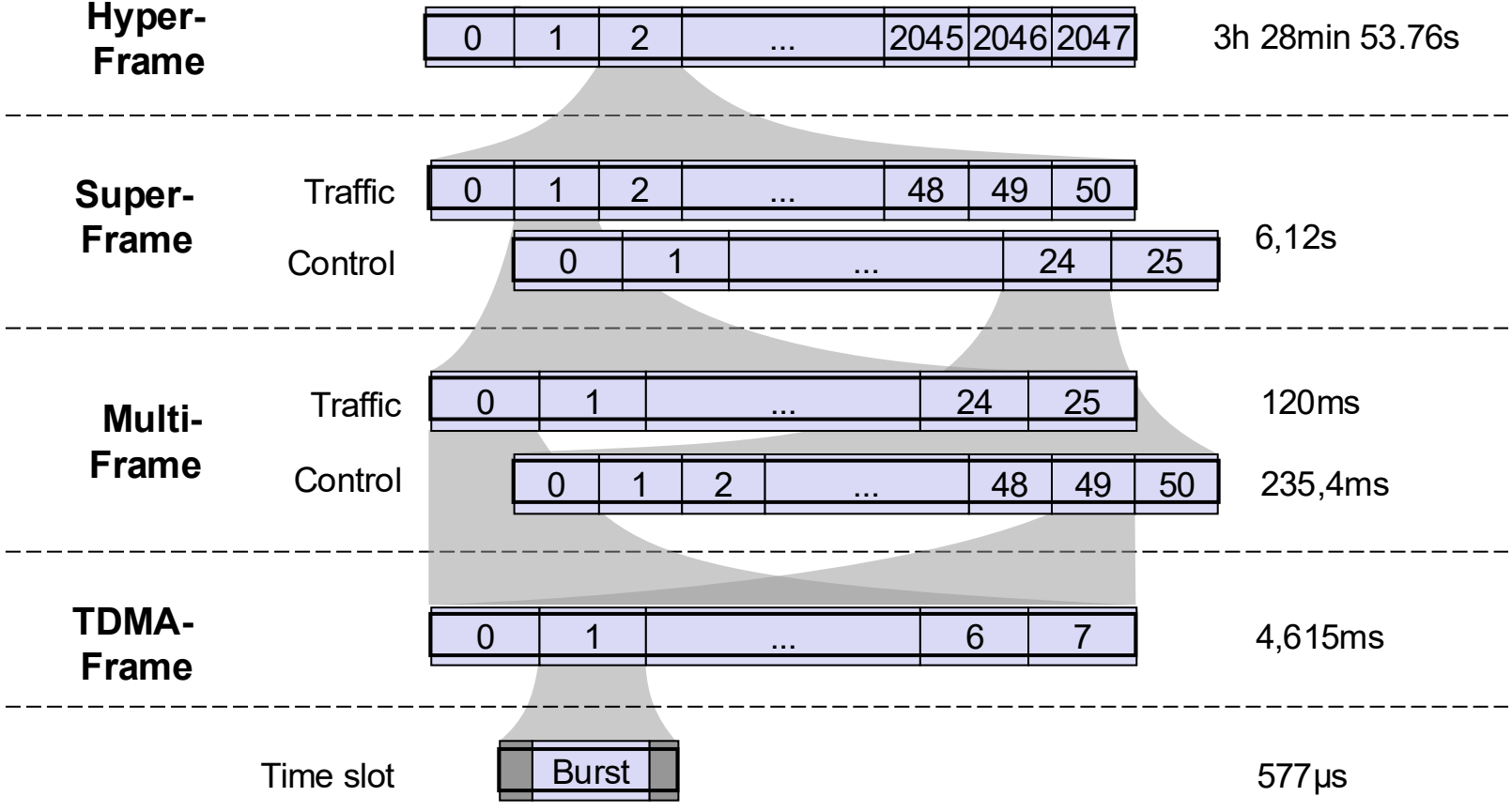

Mobile Terminated Call

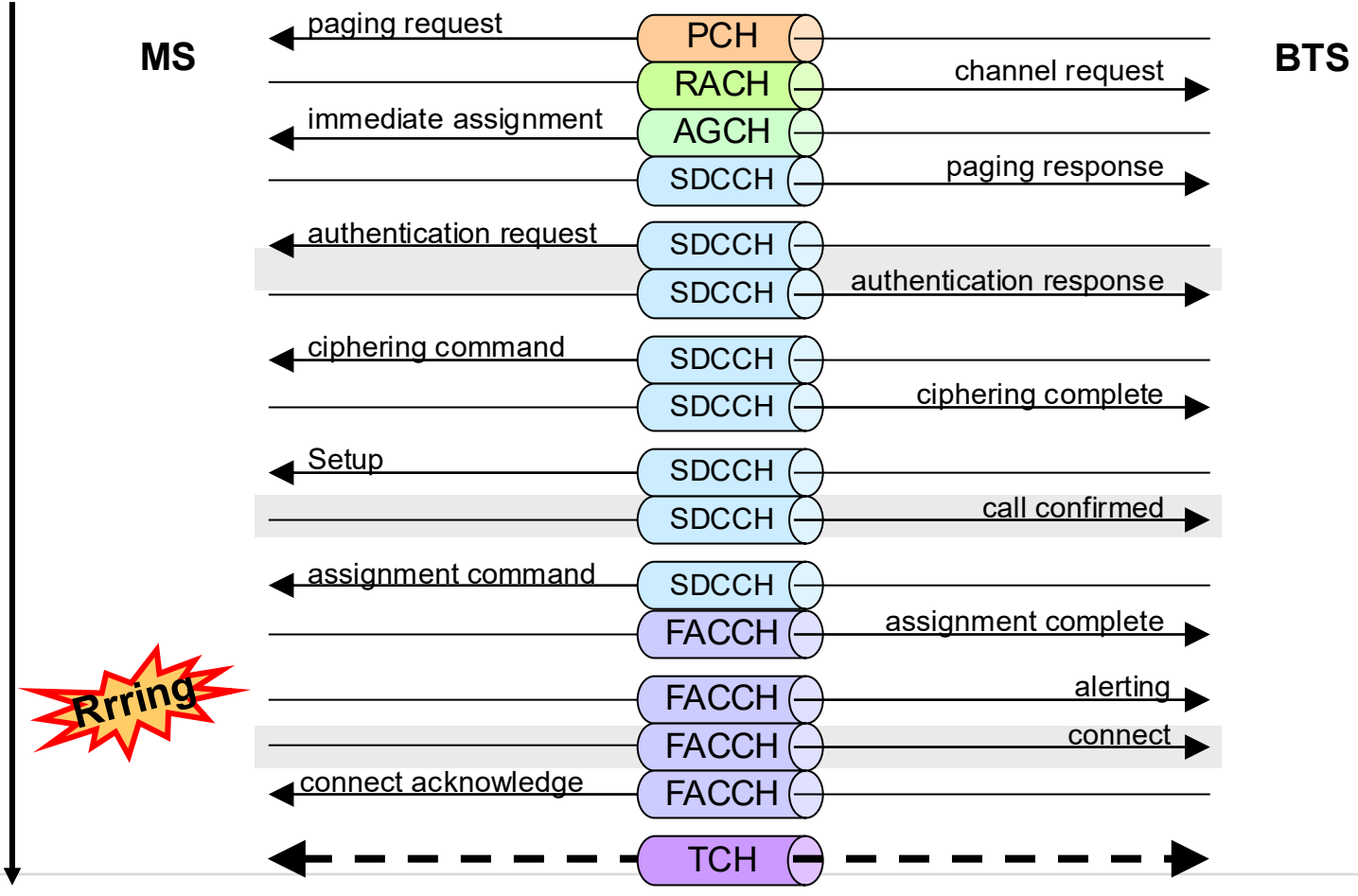

Mobile Originated Call

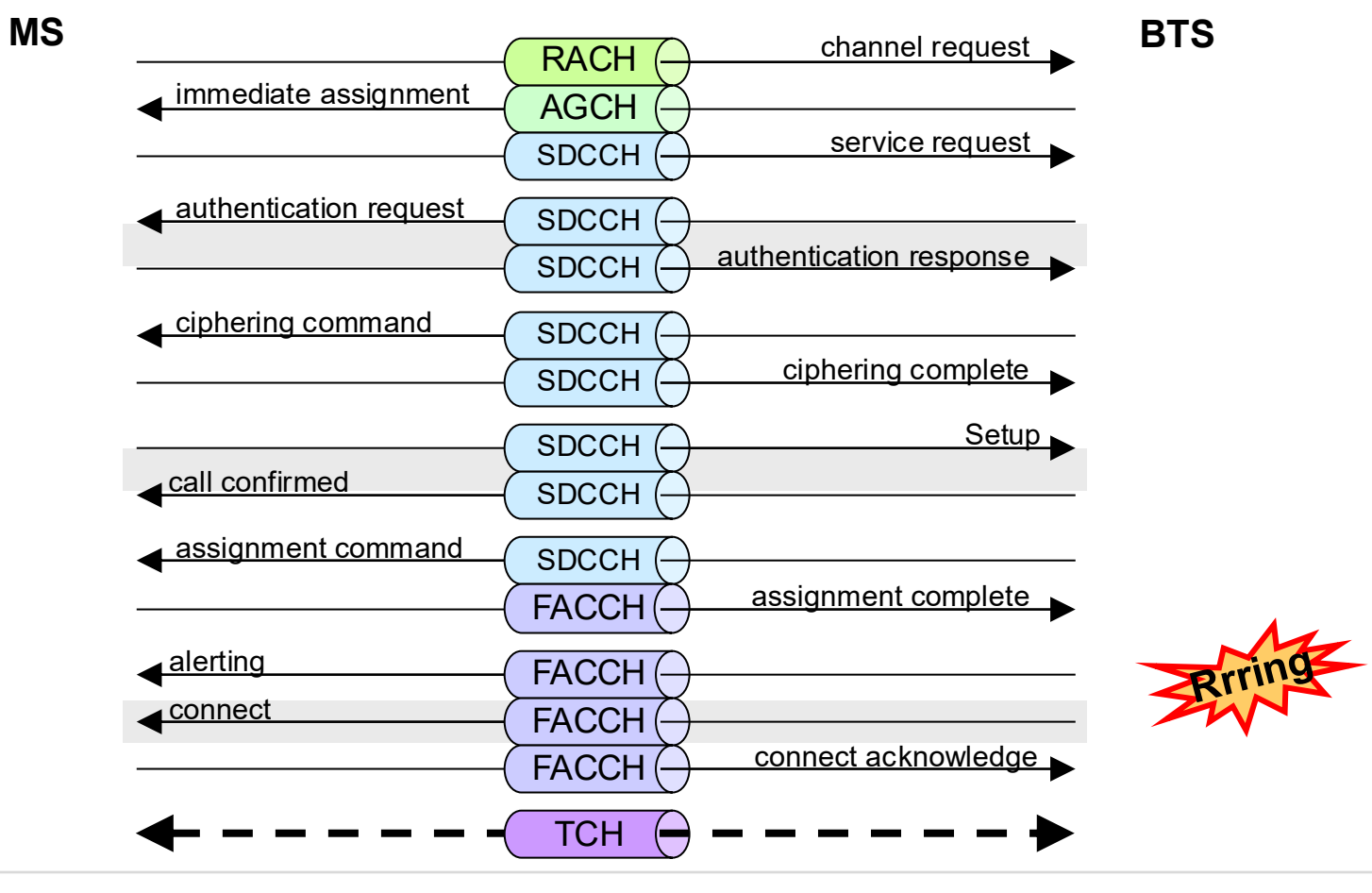

Establishing a dedicated connection

- Mobile station requests dedicated channel
  - Mobile station transmits *Channel_req* via RACH
    - Includes setup reason and random reference
      - The only way to identify a mobile station

100	Responding to a Call
101	Emergency call
110	Rebuilding a reputation
111	Call initialized by mobile station, short message
000	All other cases

8	7	6	5	4	3	2	1
Reason			Random reference				

  - Base station transmits *Immediate_Assignment* via AGCH
    - Contains *Channel_req*, so the random reference
    - Includes assigned, dedicated channel
    - Mobile station, with the same random reference occupies the channel
  - Problem
    - Random reference has very short length -> collision possible!

Contention Resolution Procedure

- After Dedicated Channel (SDCCH) Enabled
  - Establishing a bidirectional layer-2 connection in confirmed mode
    - Mobile station sends Set Async. Balanced Mode (SABM) Data Unit with Identity (IMSI, TMSI, IMEI)
    - Base station responds with Unnumbered Ack (UA)
      - Identity from first arrived SABMs
    - If there are different IDs: Disconnection
    - For identical IDs (MS, BTS):
      - Switching to Confirmed Mode
      - Data transfer can take place
    - … thus: Resolution of collisions
      - What media access procedure is being implemented here?

Global System for Mobile Communications (GSM)

Mobility management in GSM

Mobile Terminated Call

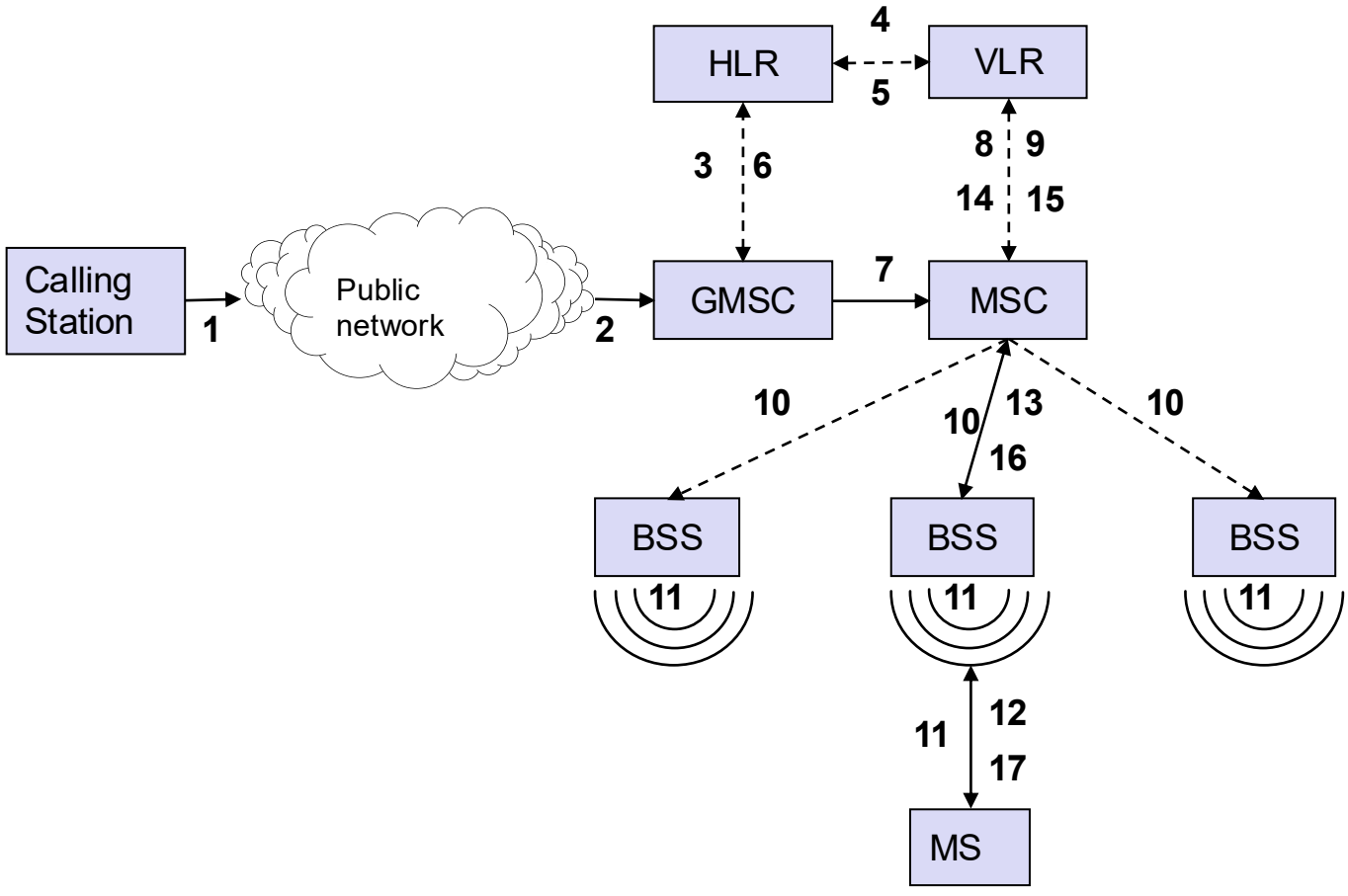

Mobile Terminated Call - Explanations

- 1: Call of a GSM subscriber
  - Dialing the subscriber’s phone number number (MSISDN)
- 2: Forwarding to the GMSC
  - Switching station recognizes that it is a mobile number
- 3: Connection Message to HLR
  - HLR can be identified from phone number
  - HLR verifies the subscriber's phone number and authorization
- 4, 5: if applicable, request/response VLR to provide an MSRN
  - HLR can designate MSC responsible for the location
- 6: Forwarding of the current MSC to the GMSC
- 7: Connection is forwarded to the current MSC
- 8, 9: MSC instructs VLR to query status
  - e.g. accessibility
- 10, 11: MSC initiates mobile subscriber call
  - Performed in all cells of the current location area of the MS
- 12, 13: Mobile subscriber responds
- 14, 15: Security Review
- 16, 17: MSC is prompted by the VLR to establish a connection

Universal Mobile Telecommunications System (UMTS)

Wireless transmission in UMTS

The UMTS Air Interface U_U

- Between mobile station and "rest" GSM network
  - Physical communication
    - Between mobile station and NodeB
  - Logical communication
    - Between mobile station and RNC
    - Between mobile station and MSC

- Multiplexing technology used
  - CDMA for the separation of stations, channels, cells, ...

- Duplex process
  - Frequency Duplex (FDD): Multiple access through combination of FDMA and CDMA
  - Time Duplex (TDD): Multiple Access by Combination of TDMA and CDMA
  - FDD was in the foreground during the development of UMTS
    - TDD not considered further in the following

CDMA in UMTS

- Constant chip rate of 3.84 Mchips/s (FDD)
- Chanel specific Codes (Channelization Codes)
  - Separation of physical channels
  - Variable data rate due to different spread factors (OVSF codes)
  - Orthogonal
  - Same physical channel for all stations
- Station specific codes (Scrambling Codes)
  - Separation of different stations (UL) or cells (DL)
  - Quasi-orthogonal

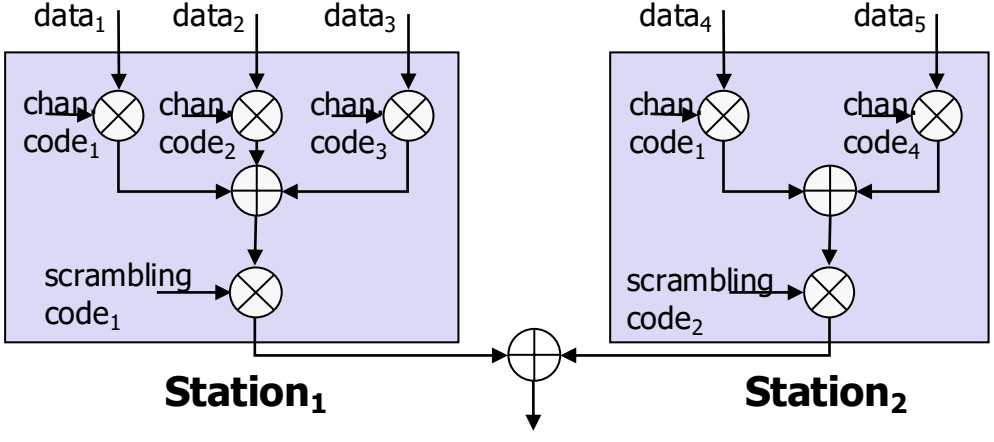

Applicaiton of Codes

	Channelization Code	Scrambling Code
Usage	UL: Separation of the data and control channels of a station DL: Separation of data for different stations in a cell	UL: Mobile Station Separation DL: Cell / Sector Separation
Length	4 – 256 chips (1.0 – 66.7 µs)	UL+DL: 10ms = 38400 Chips
Number of codes	Corresponds to the spread factor	UL: Several million DL: 256
Code family	Orthogonal Variable Spreading Factor (OVSF)	„Gold Code“

Pros and Cons of CDMA

- Advantages of CDMA
  - Robust against multipath propagation
    - Signal with a different transit time acts like a signal with "wrong code" □ Noise
    - Several CDMA decoding units can work in parallel on signals from different propagation paths (microdiversity) → Signal amplification (rake receiver)
  - UE: Simultaneous reception of several sector antennas or NodeB possible
    - Acts like multiple pathways in multipath propagation (macrodivesity)
    - Can be handled by rake receiver

- Disadvantages CDMA
  - Extremely susceptible to near-far effect
    - Precise power control required in the uplink, 1500 adjustments per second

Universal Mobile Telecommunications System (UMTS)

Media access in UMTS

Control and Data Plane

- Separation of two layers
  - Control plane
    - Signaling data between UE and network, e.g. connection management, mobility management, GPRS session management, ...
  - User Plane
    - Voice telephony and IP packages
- UMTS introduces Bearer concept
  - Logical connection between network elements, established by Radio Resource Control (RRC)
  - Specifies quality of service attributes of the connection (e.g. data rate, latency, packet loss)
  - Used in control and data level
  - If necessary, must be mapped to ducts at the air interface
  - Example: Radio Access Bearer (SGSN ↔ UE)

[7.6]

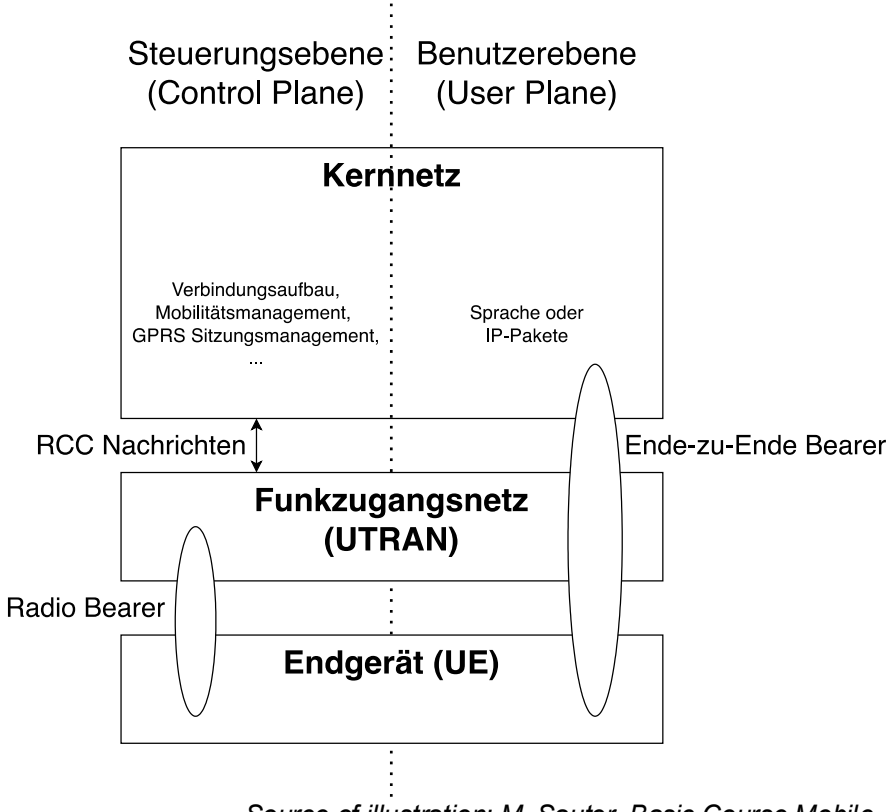

Source of illustration: M. Sauter, Basic Course Mobile Communication Systems, 7th edition, Springer, 2018

Logical Channels in UMTS

[7.6]

- Traffic channels
  - DTCH Dedicated Traffic Channel } *Voice and data transmission*
  - CTCH Common Traffic Channel } *Cell broadcast information, e.g. warning messages*

- Control channels
  - BCCH Broadcast Control Channel
  - PCCH Paging Control Channel

  } *Information from base station to all mobile stations*

  - CCCH Common Control Channel } *Establishing a connection network -> Mobile station*
  - DCCH Dedicated Control Channel } *Signaling information for connection control and mobility management*

Mapping Logical to Physical Channels

[7.6]

- Two-stage mapping via transport channels
  - Logical channels
    - Describe different information flows (user data or tax information)
  - Transport channels
    - Prepare data packets from logical channels for transmission
    - Determination of transmission parameters (e.g. packet size, checksum, error correction)
  - Physical Channels
    - Set CDMA code and parameters for transmission

Downlink Channel Mapping

[7.6]

- Transport channels
  - BCH Broadcast Channel
  - PCH Paging Channel
  - FACH Forward Access Channel
  - DCH Dedicated Channel
  - DSCH Downlink Shared Channel

- Physical Channels
  - P-CCPCH Primary Common Control Physical Ch.
  - S-CCPCH Secondary Common Contr. Ph. Ch.
  - DPDCH Dedicated Physical Data Channel
  - DPCCH Dedicated Physical Control Channel
  - PDSCH Physical Downlink Shared Channel

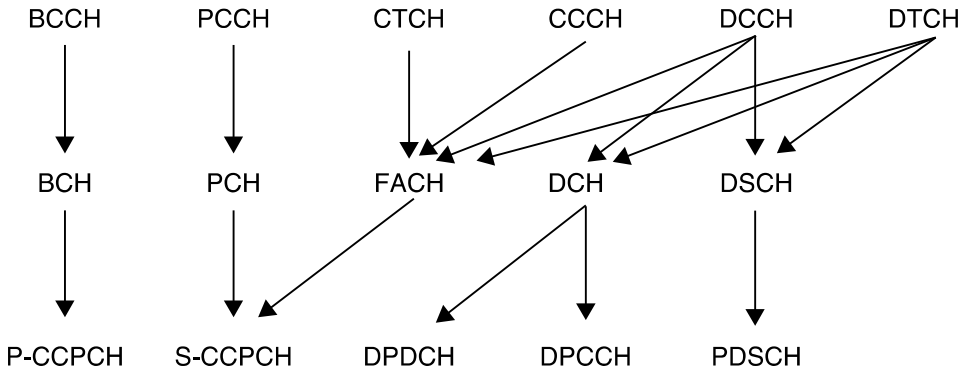

Source of illustration: M. Sauter, Basic Course Mobile Communication Systems, 7th edition, Springer, 2018

Uplink Channel Mapping

- Transport channels
  - RACH Random Access Channel
  - DCH Dedicated Channel

- Physical Channels
  - PRACH Physical Random Access Channel
  - DPDCH Dedicated Physical Data Channel
  - DPCCH Dedicated Physical Control Channel

[7.6]

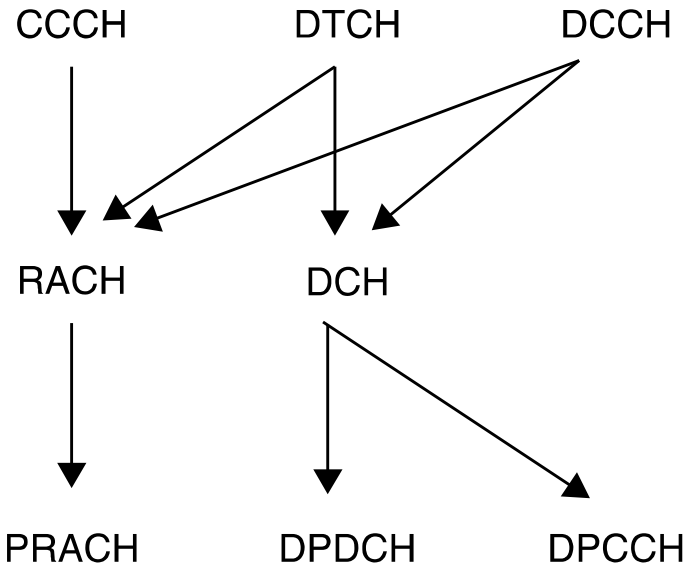

Source of illustration: M. Sauter, Basic Course Mobile Communication Systems, 7th edition, Springer, 2018

Universal Mobile Telecommunications System (UMTS)

Mobility management in UMTS

Mobility Support in UTRAN: SRNC and DRNC (1)

- Mobile station with active connection
  - Logical relationship between mobile station and an RNC is established when connection is established
    - Serving RNC (SRNC)
  - Relationship is maintained even with mobility
    - … until the connection is dismantled
    - When reconnecting, another RNC can become the serving RNC

- Problem
  - Mobile station can move and leave the SRNC's area of responsibility
  - Drift-RNC (DRNC)
    - RNC responsible for a remote cell
      - Physical connection to the DRNC
    - Data is forwarded to mobile station via SRNC and DRNC
      - DRNC forwards data via its interface to the SRNC
      - Logical connection to the SRNC is maintained
        - SNRC can be relocated

Mobility Support in UTRAN: SRNC and DRNC (2)

- Each RNC responsible for its amount of cells
- For a connection between UE and UTRAN exactly one SRNC
- DRNC support SRNC with radio resources
- Support from NodeB for
  - Handover
  - Macrodiversity

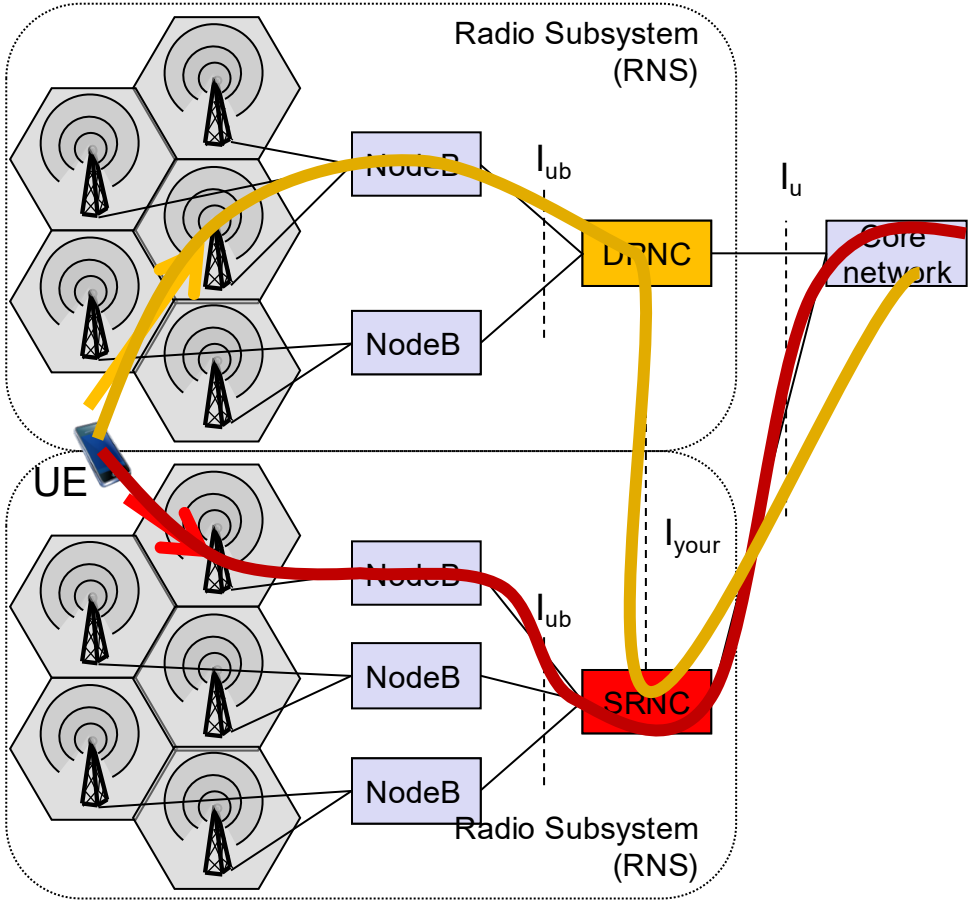

Mobility Support in UTRAN: Handover

- Multiple handover procedures
  - Hard Handover
    - Connection to old NodeB is dismantled before new one is established
  - Soft Handover
    - Connection to old NodeB is disconnected after new one is established or simultaneous connection to several NodeB
  - Softer Handover
    - Simultaneous connection via several sector antennas of a NodeB
  - Soft-Softer Handover
    - Soft and soft handover at the same time, i.e. Connection via multiple NodeB and sector antennas

Macrodiversity by Soft/Softer Handover

- Handover state is not transient, but stable
- Parallel communication via multiple sector antennas
- This results in higher data rates
- Requires re-combination of multiple data streams in the uplink

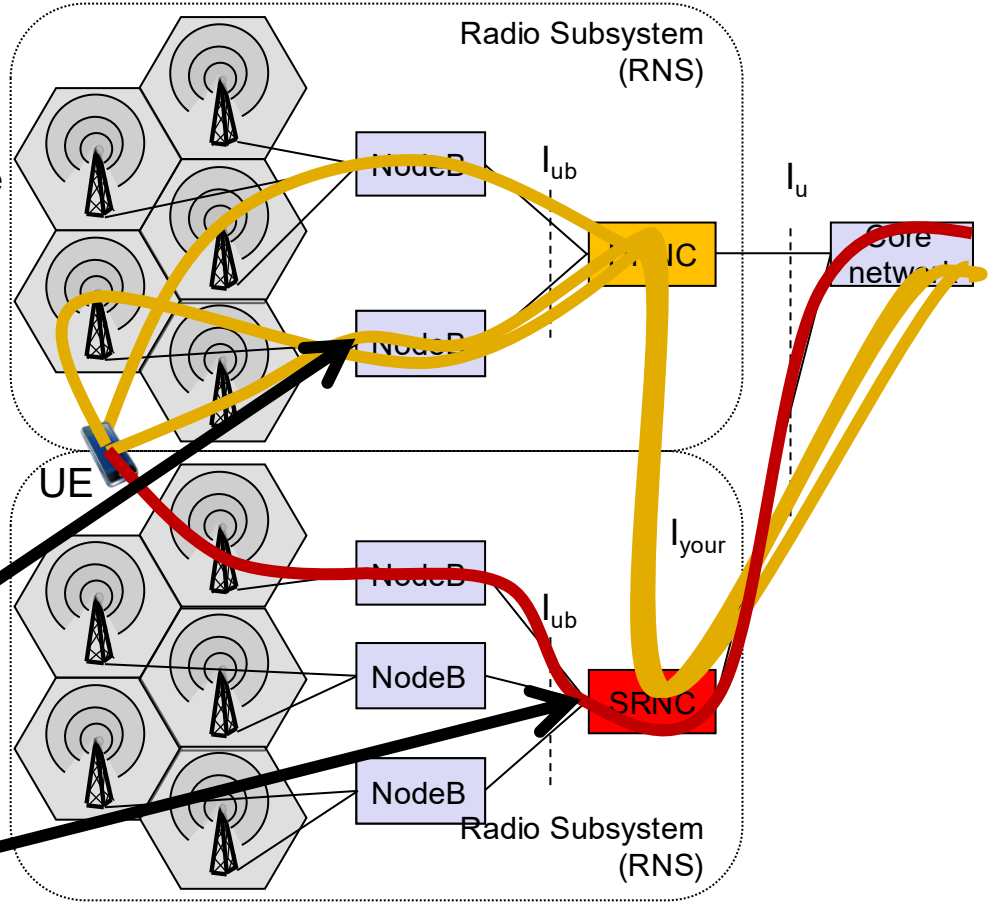

Soft Handover:
Combining Maximum Ratio Combining with the help of Rake Receiver (see above) in NodeB

Soft Handover:
Radio Frame Selection with correct checksum in SRNC

Highspeed Packet Access (HSPA)

Highspeed Packet Access (HSPA)

[7.7, 7.8]

- Only minor adjustments to the architecture necessary
  - In principle, RNC, SGSN, GGSN and antennas can still be used
  - Above all, software updates necessary
  - Potentially minor hardware changes in NodeB, RNC, and endpoints for higher data rates

- Coexistence with Release 99
  - Provider can operate cells with and without HSPA

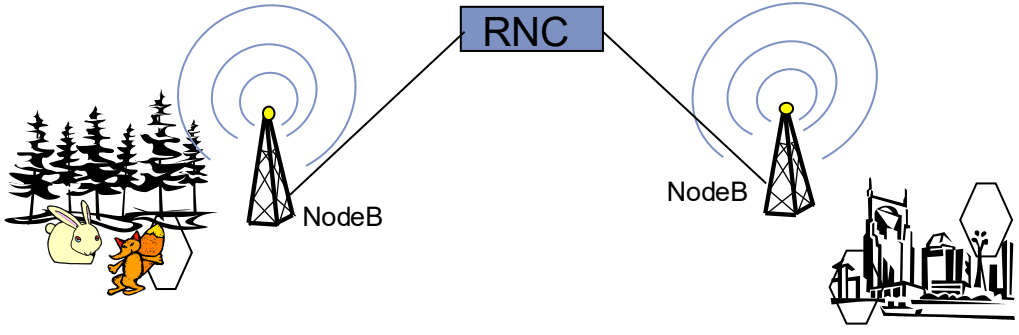

Cell without HSPA

Cell with HSPA

HSPA: Architecture

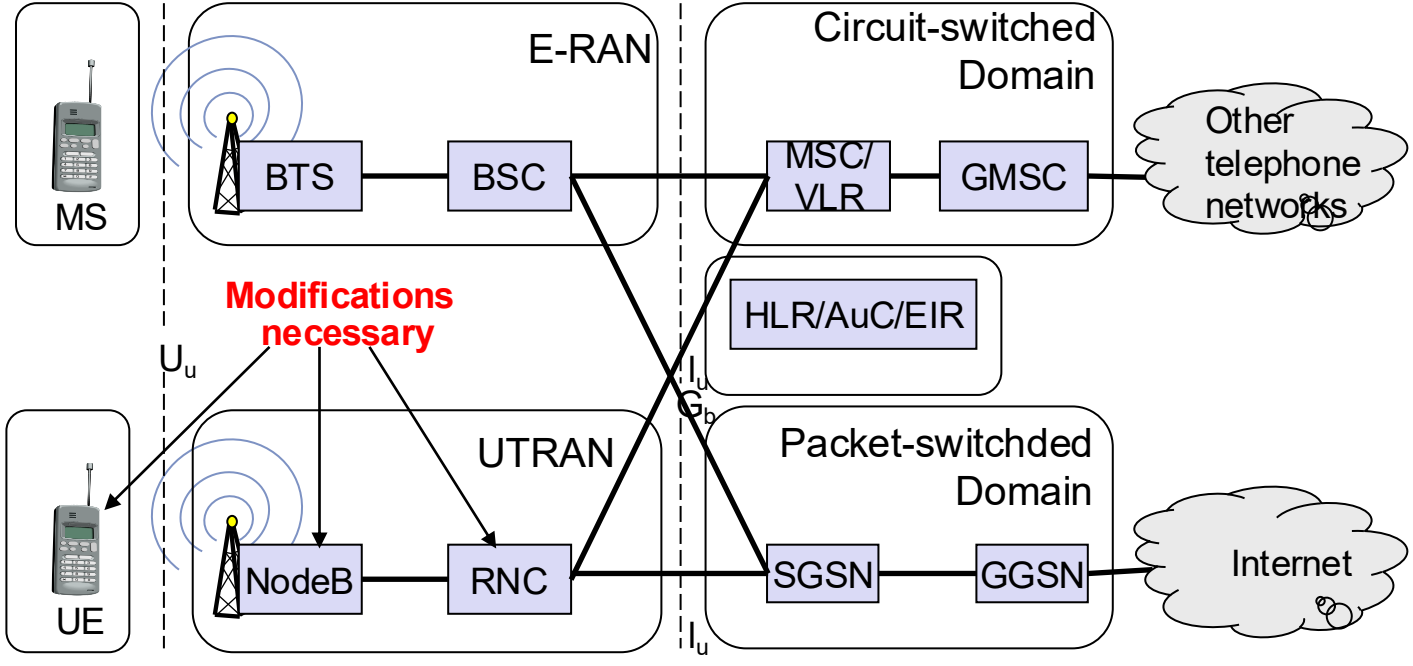

HSPA: Technical innovations

- We consider downlink: High Speed Downlink Packet Access (HSDPA)

- Flexible channel allocation (considered below)
  - HS-DSCH (High Speed Downlink Shared Channel) instead of DCH (Dedicated Channel)

- Adaptive Modulation and Encoding (AMC)
  - QPSK: with inferior channel quality (data rate such as UMTS)
  - 16QAM: with very good channel quality (twice the UMTS data rate)
  - FEC: Adaptive Coding (**F**orward **E**rror **C**orrection)
    with Hybrid Receipts (Hybrid ARQ)

- Upgrading NodeB with MAC-hs
  - Packet retries no longer between RNC and UE but between NodeB and UE

Flexible channel allocation: Idea

- Fading is helpful in multi-user environments!
  - Likely uncorrelated for different users
    → Multi-user diversity
  - Allocate resources to users with the best channel quality at all times
    → Throughput maximized
  - Gets better with
    growing number of participants

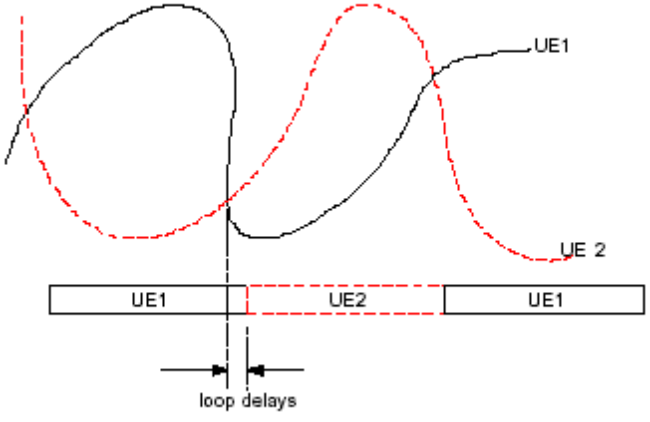

Flexible channel allocation: Implementation

- High Speed Downlink Shared Channel (HS-DSCH)
  - Combination of time and code division multiplexing (TDMA, CDMA)
  - Time division multiplexing with 2 ms time slices
    – (Short) Transmission Time Interval (S)TTI
  - 15 (sub-)channels (= OVSF codes)
  - Can be divided into a maximum of 4 devices per time slot

- The better the channel quality, the more channels are allocated to a participant
  - Avoids time-consuming error corrections
  - However, minimum data rate is guaranteed

HSDPA: Flexible channel allocation

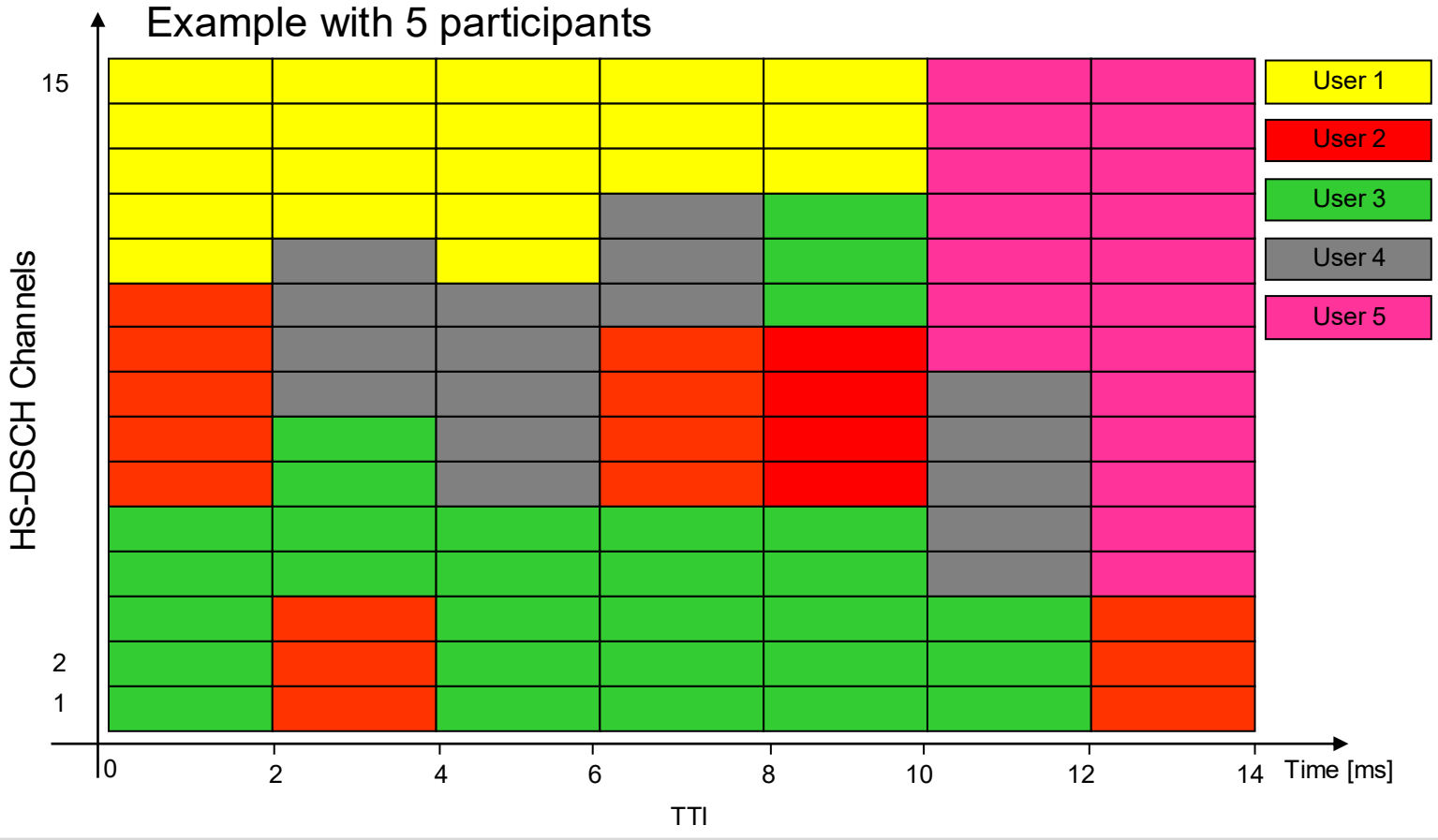

Flexible Channel Allocation: Scheduling Approaches

- Round Robin: Calling each user in turn
  - Pros
    - Fair time allocation (with the same length of time slots)
    - Very simple approach
  - Cons
    - Low cell and user throughput
- Best Effort: Choose users with the best channel quality
  - Pros
    - Easy to implement and highest throughput
  - Cons
    - Starvation in users with low channel quality
- Proportional Fairness: Alignment of Channel Quality / Throughput
  - Pros
    - Higher throughput than round robin
  - Cons
    - Does not use any QoS information

Summary GSM and UMTS

- Evolution instead of revolution
  - Investment protection
  - Fast application

- For higher data rates / lower latencies, replacement of radio access networks necessary
  - Will be significantly advanced in 4G / 5G / 6G networks

Exercises - Mobile Networks

- 7.1 Give an overview of the architecture of GSM and UMTS networks.
- 7.2 Which multiplexing techniques are used in GSM and UMTS radio access networks?
- 7.3 Describe how inter-cell, intra-cell, and inter-symbol interference is handled in the different radio access networks.
- 7.4 How is a traffic channel assigned in GSM?
- 7.5 How is CDMA used in UMTS?
- 7.6 Explain the three main innovations of HSDPA compared to UMTS.
- 7.7 What are the advantages and disadvantages of the scheduling procedures presented for HSDPA?

References and further reading

- [7.1] Electronics Compendium, Mobile Communications Technology (Basics). https://www.elektronik-kompendium.de/sites/kom/0406221.htm (accessed 21.11.18)
- [7.2] Radio-electronics.com: 3GPP Standards & Release Numbers. https://www.radio-electronics.com/info/cellulartelecomms/3gpp/standards-releases.php (abgerufen 21.11.2018)
- [7.3] Vodafone GmbH, network coverage: That's how good our mobile communications are. https://www.vodafone.de/hilfe/netzabdeckung.html (accessed 21.11.18)
- [7.4] http://www.3gpp.org (accessed 21.11.18)
- [7.5] H. Kaaranen, A. Ahtiainen, et. al., UMTS Networks – Architecture, Mobility and Services, Wiley Verlag, 2001.
- [7.6] M. Sauter, Basic Course Mobile Communication Systems, 7th edition, Springer, 2018
- [7.7] H. Holma, A. Toskala (Eds.), HSDPA/HSUPA for UMTS – High Speed Radio Access for Mobile Communications, Wiley Verlag, 2006.
- [7.8] H. Holma, A. Toskala (Eds.), WCDMA For UMTS – HSPA Evolution and LTE, Wiley Verlag, 4th edition 2007.